50Ω Adapters 0.8mm Female - 1.0mm Female

Part Number: 08-10-FF

Electrical Specifications at 25°C, all specifications are subject to change without notice at any time. Rev. A

Electrical & Mechanical Specifications

Frequency Range	DC-110GHz
VSWR (Max.)	1.35:1
Insertion Loss (Max.)	0.65dB
Durability (Min.)	1000 Cycles
Insulation Resistance (Min.)	4000 MΩ
Operating Temperature	-65℃ ~+165℃
Body Material	Stainless Steel Passivated
Center Conductor	Beryllium Bronze Gold Plated
Dielectric	PEI

2D Outline Drawing

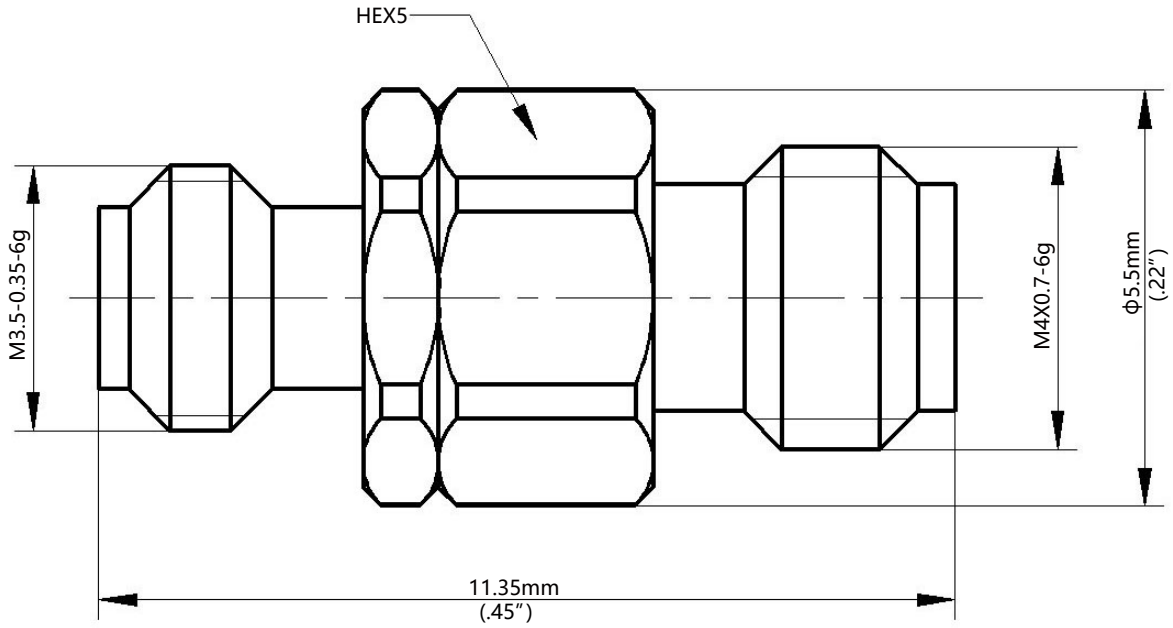

50Ω Adapters 0.8mm Female - 1.0mm Female

Part Number: 08-10-FF

Electrical Specifications at 25°C, all specifications are subject to change without notice at any time. Rev. A

Typical Graph

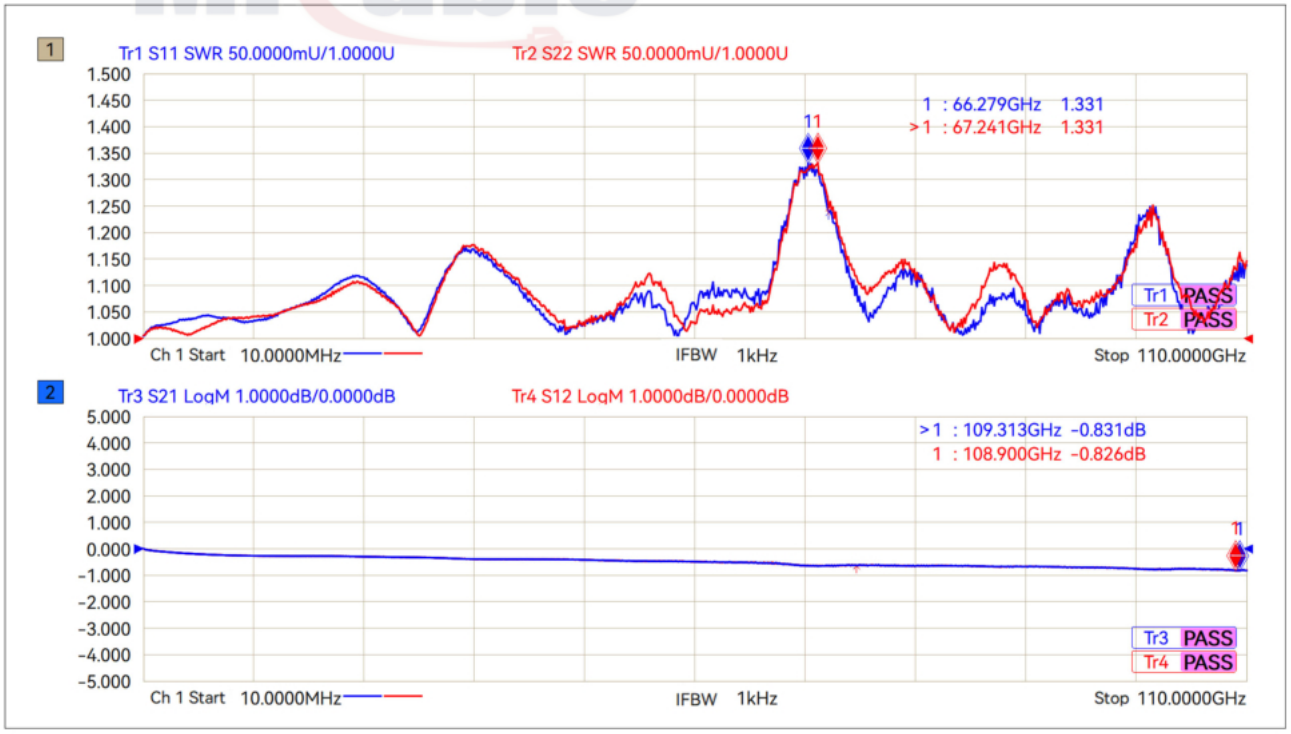

Note: Test curve is measured after mating with 0.8mm male/0.8mm female adapters.
Test data of insertion loss is for 2 adapters.